IF THIS DRAWING IS PRINTED OR COPIED IT WILL BECOME AN UNCONTROLLED DOCUMENT

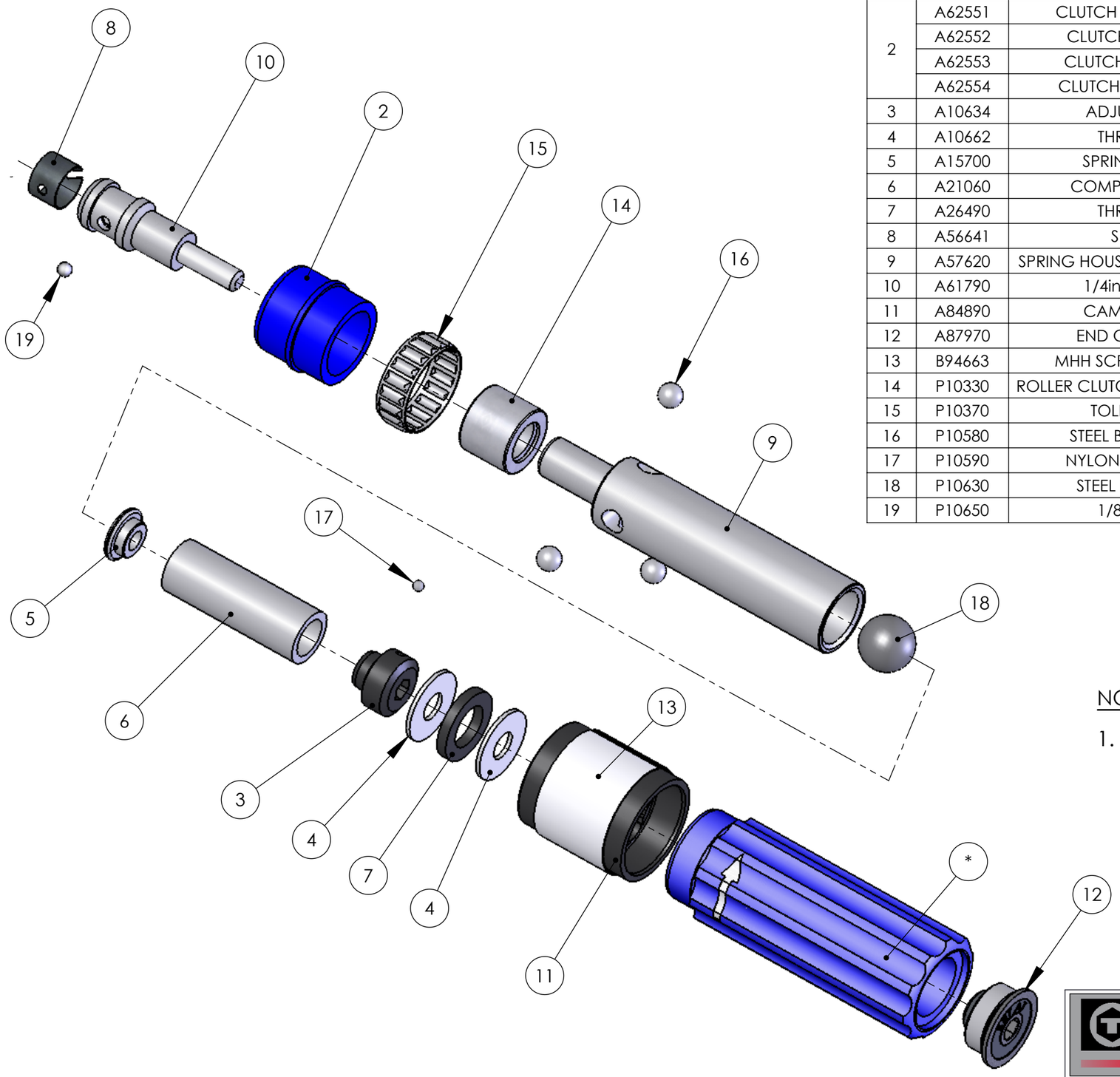

ITEM NO.	PART NUMBER	DESCRIPTION	HANDLE RED/QTY.	HANDLE GREEN/QTY.	HANDLE BLUE/QTY.	HANDLE GOLD/QTY.
1	B15361	HANDLE - GLOSS GREEN	-	1	-	-
	B15362	HANDLE - GLOSS RED	1	-	-	-
	B15363	HANDLE - GLOSS BLUE	-	-	1	-
	B15364	HANDLE - GLOSS GOLD	-	-	-	1
2	A62551	CLUTCH HOUSING - GREEN	-	1	-	-
	A62552	CLUTCH HOUSING - RED	1	-	-	-
	A62553	CLUTCH HOUSING - BLUE	-	-	1	-
	A62554	CLUTCH HOUSING - GOLD	-	-	-	1
3	A10634	ADJUSTING SCREW	1	1	1	1
4	A10662	THRUST WASHER	2	2	2	2
5	A15700	SPRING THRUST PAD	1	1	1	1
6	A21060	COMPRESSION SPRING	1	1	1	1
7	A26490	THRUST WASHER	1	1	1	1
8	A56641	SPRING CLIP	1	1	1	1
9	A57620	SPRING HOUSING ONE WAY CLUTCH	1	1	1	1
10	A61790	1/4in . FH ADAPTOR	1	1	1	1
11	A84890	CAM RING - 6 LOBE	1	1	1	1
12	A87970	END CAP - MOULDED	1	1	1	1
13	B94663	MHH SCREWDRIVER LABELS	1	1	1	1
14	P10330	ROLLER CLUTCH - 9.52mm SHAFT DIA.	1	1	1	1
15	P10370	TOLERANCE RING	1	1	1	1
16	P10580	STEEL BALL - 7/32in DIA.	3	3	3	3
17	P10590	NYLON BALL - 3-32in DIA	1	1	1	1
18	P10630	STEEL BALL - 1/2in DIA	1	1	1	1
19	P10650	1/8in STEEL BALL	1	1	1	1

NOTE;

1. WHEN ORDERING HANDLE PLEASE STATE DIRECTION OF ARROW, IE. CLOCKWISE OR ANTI-CLOCKWISE.

DATE	ISSUE
17/04/2008	8
REVISIONS	

Torqueleader®
www.torqueleader.com

To order please contact
Email: sales@torqueleader.co.uk
Tel: +44 (0)1483 892722
Fax: +44 (0)1483 898536

MINOR FH ONE WAY

2009 ONWARDS